JOHNFORD®

CNC Super Lathes

SL-20/30/35/40/40L/50/60/65/70/80/100/120

CNC Super Lathes

JOHNFORD CNC Super La
building and test to provide
The CNC Super Lathes also
JOHNFORD's outstanding
to achieve a mass producti

SL-20 / 30 / 40 / 40L

Torque Power Chart

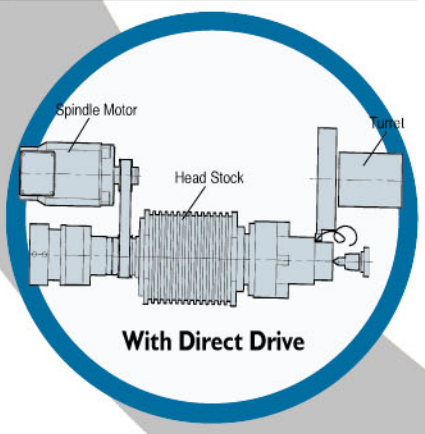

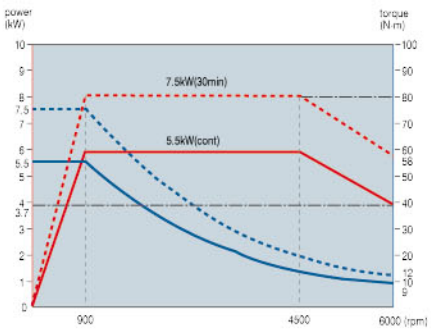

SL-20 FANUC AC α 6i

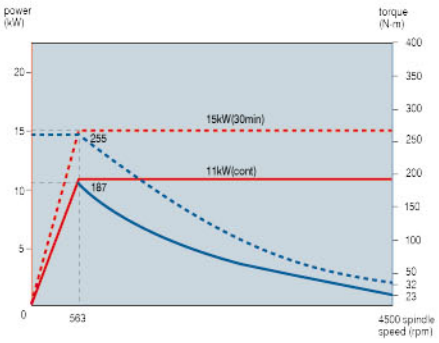

SL-30/35 FANUC AC α P22

thes are under strict engineering,
you the best machining quality.
bring you profitable operations.
technology experience will help you
on and down the cost.

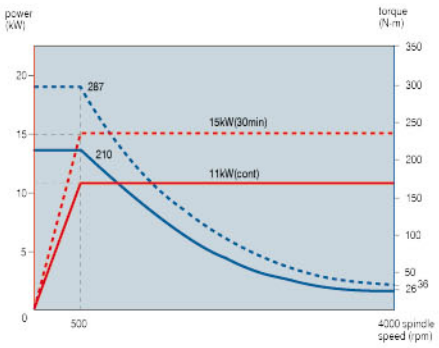

SL-40/40L FANUC AC α P22

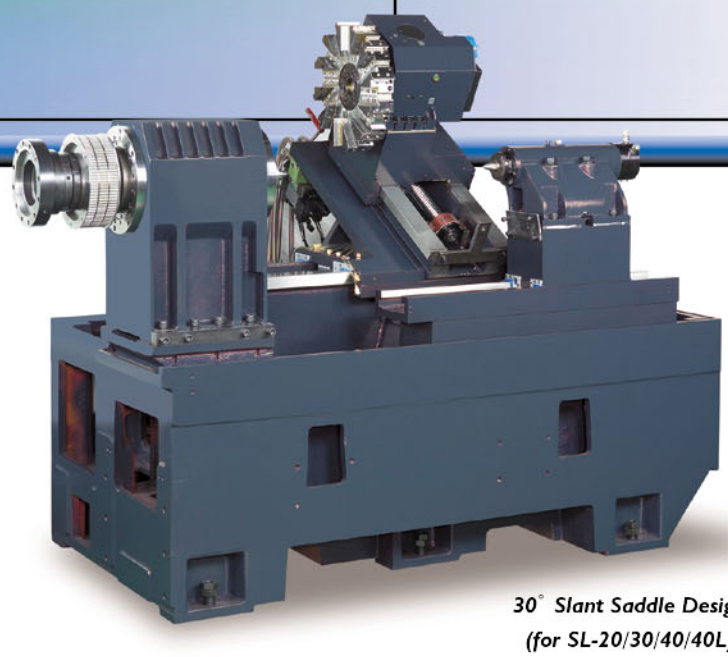

30° Slant Saddle Design
(for SL-20/30/40/40L)

CNC Super Lathes

SL-35 / 50 / 60 / 65 / 70 / 80 / 100 /

Torque Power Chart

※ About the power chart of SL-35, please refer to the content of Page 1.

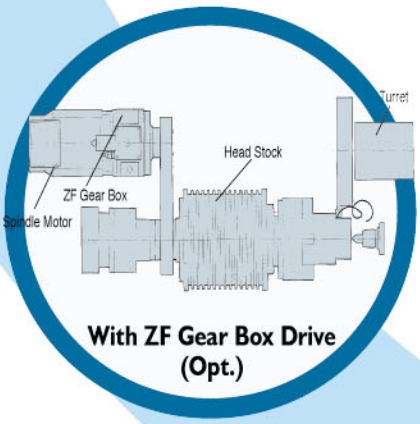

With ZF Gear Box Drive (Opt.)

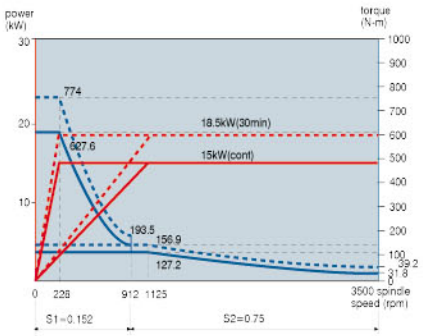

SL-50/60/65 FANUC AC α 15

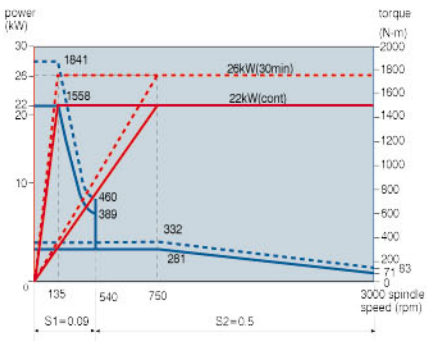

SL-50A/60A/65A/70A/80A/100A FANUC AC α 22

Sub-Spindle Series (SL-35/50/60/50A/60A/70A/80A/100A-2S)

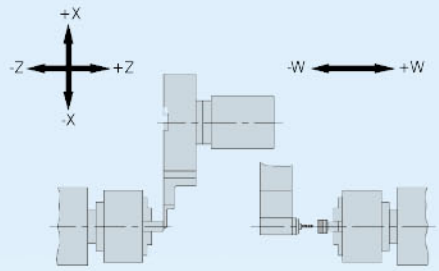

2S Series

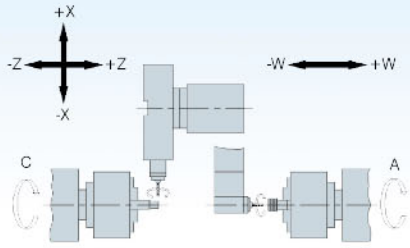

2S+C-Axis Series

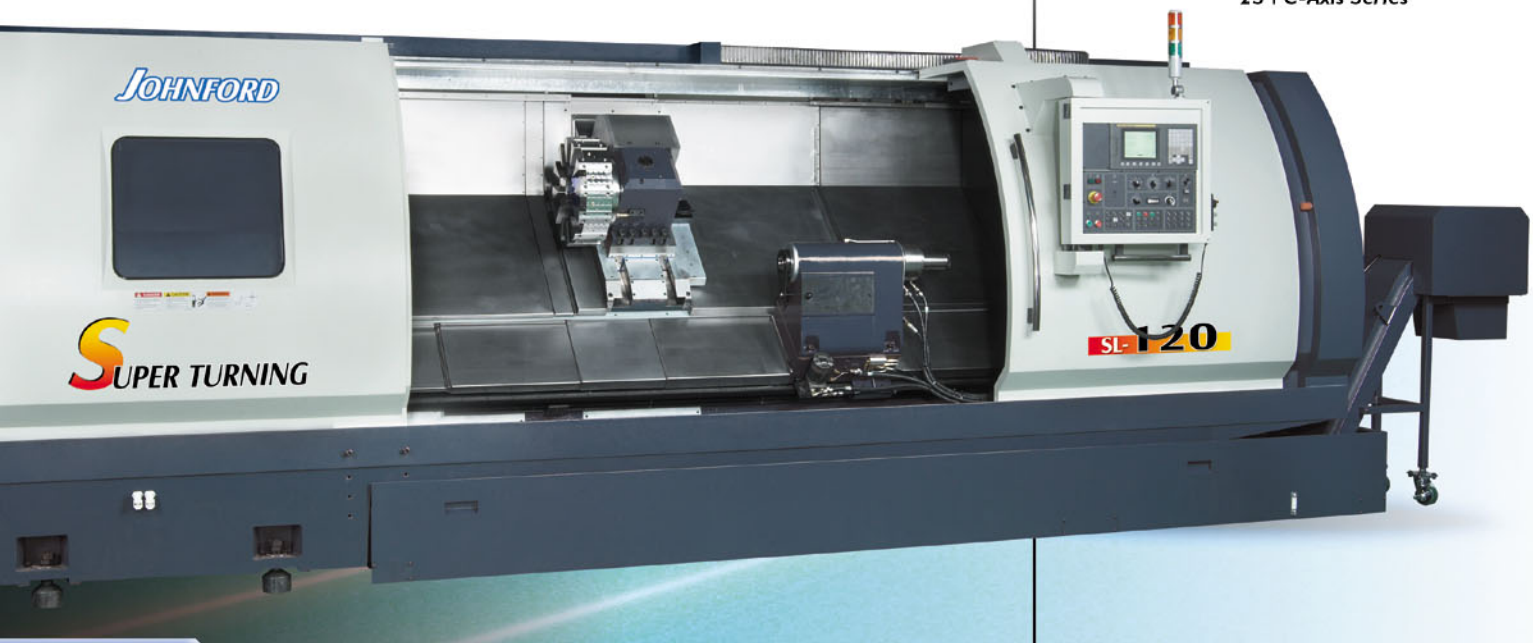

120

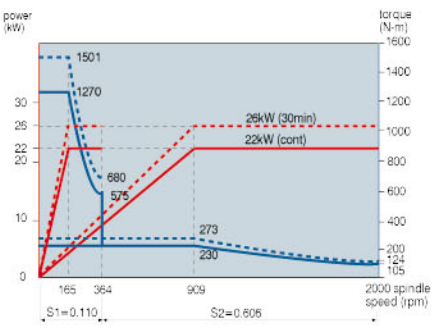

SL-50B/60B/65B FANUC AC α 22

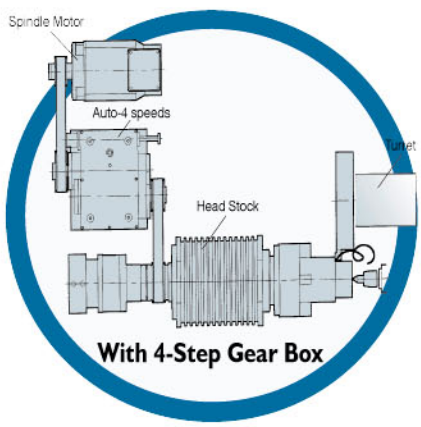

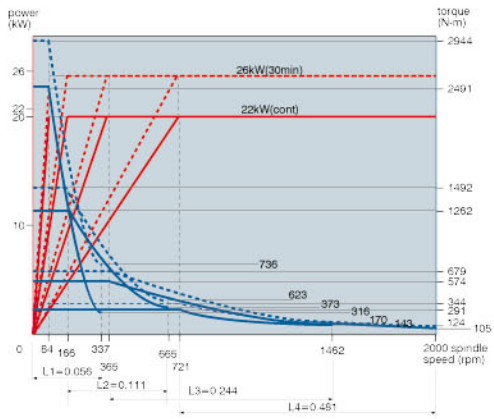

SL-70B/80B/100B FANUC AC α 22

Advanced Structure

** This construction is only for SL-35/50/60/65/70/80/100/120*

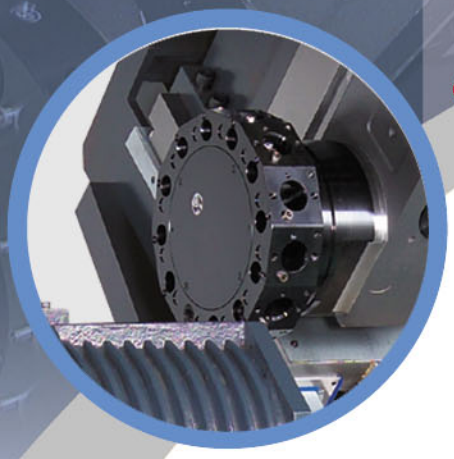

Turrets

- High stiffness and accuracy (positioning ±3" / repeatability ±1")
- High loading capacity:
  1. ↑ , 369 kgf-m , →410 kgf-m , ←174 kgf -m for CLT-80
  2. ↑ , 600 kgf-m , →1008 kgf-m , ←420 kgf-m for CLT-100
  3. ↑ , 1535 kgf-m , →1646 kgf-m , ←809 kgf-m for CLT-160
- Clamping forces :
  1. 2530 kg for CLT-80
  2. 3400 kg for CLT-100 / 160

High precision spindle is the most suitable to do heavy cutting with rigid structure. It has great power exceeding the turning machines of the same grade in the industry.

Bar capacity:

- φ42 mm (φ1.7") / A2-5
- φ51 mm (φ2") / A2-6
- φ76.5 mm (φ3") / A2-8
- φ91 mm (φ3.6") / A2-8
- φ102 mm (φ4") / A2-11 (Opt.)
- φ116 mm (φ4.6") / A2-11

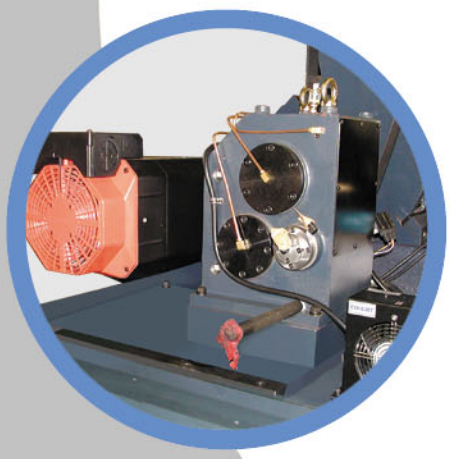

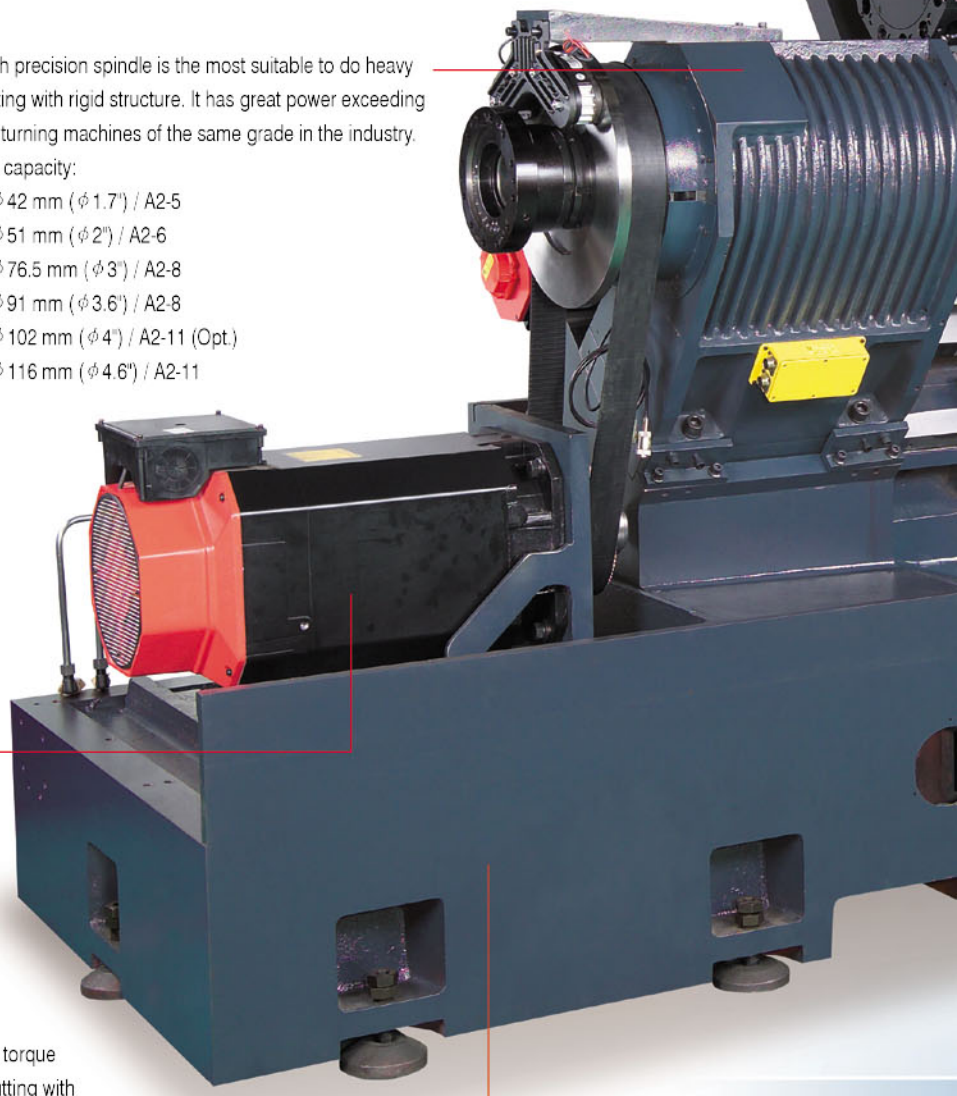

The speed change gear box can give high torque output for cutting. It handles heavy duty cutting with ease and offer proper speed range for light and medium cutting as well. On the models of SL-20/30/35/40/40L, the gear box is optional. The ZF gear box is also optional for your choice.

The bed of machine is made from high quality Meehanite cast iron, one piece cast and scientifically constructed for high stability, rigidity, and accuracy.

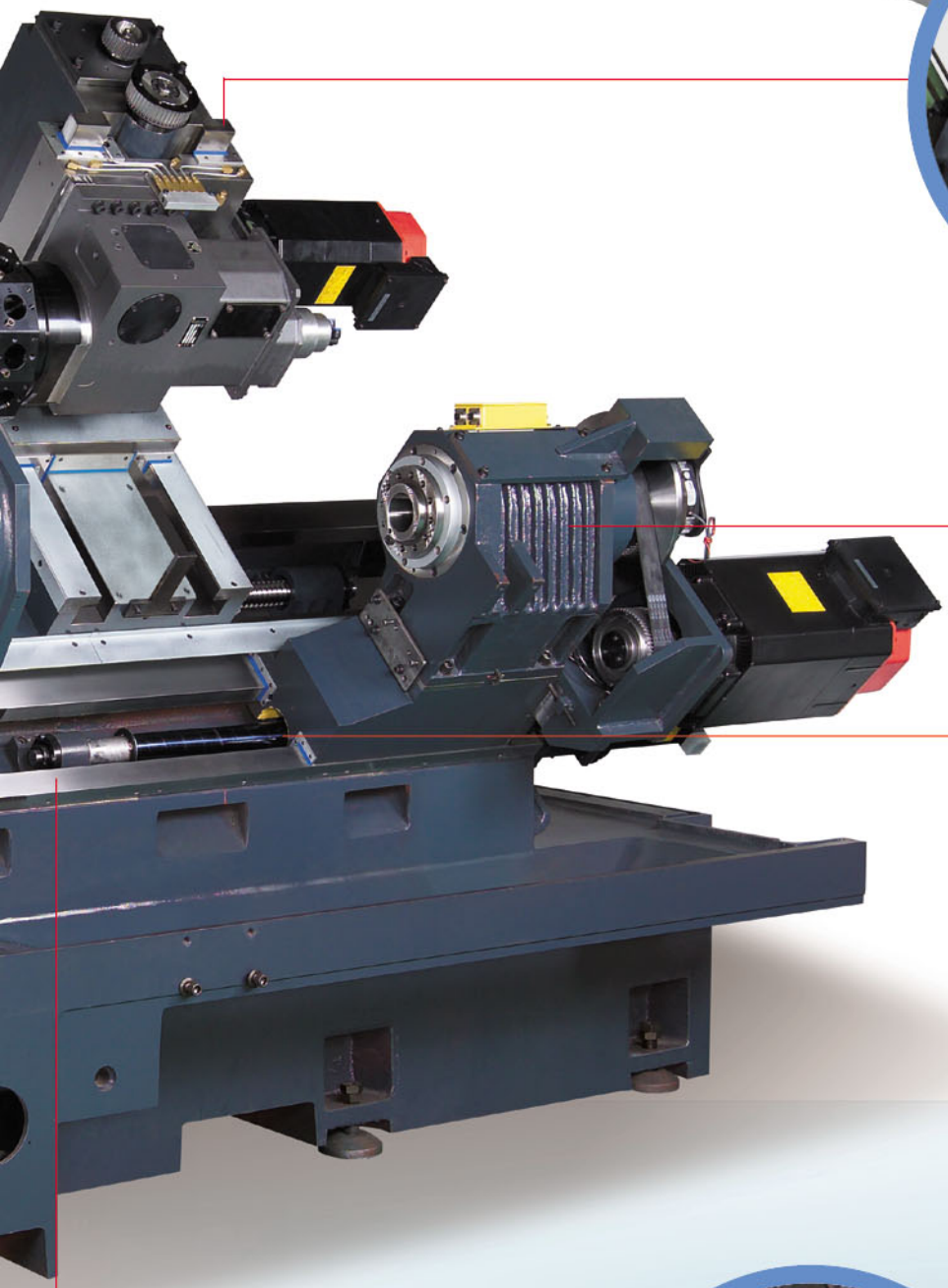

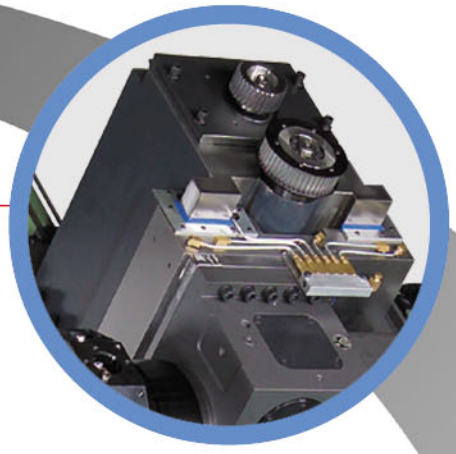

The optional Y axis with C axis can provide you flexible turning operations to make the special parts.

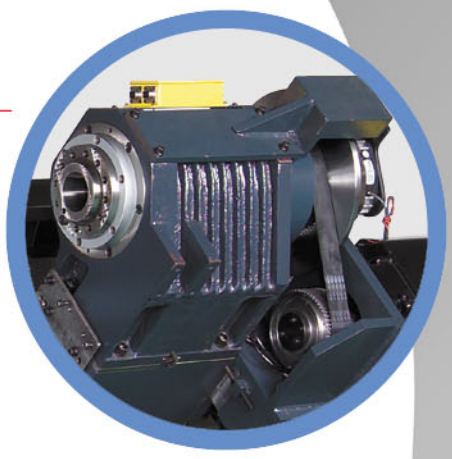

There are two types of tailstocks used on the SL machines, hydraulic tailstock and programmable hydraulic tailstock. The hydraulic tailstock is standard for SL-20/30/40/40L and the programmable hydraulic tailstock is standard for SL-35/50/60/65/70/80/100/120. Both of the tailstocks have larger tailstock quill diameter and taper, and the rotary quill is optional. The quill travel on the programmable hydraulic tailstock is controlled with limit switch.

All sideways are hardened, precision ground coated with TURCITE-B plus master scraping, ensuring smoothness, accuracy and durability.

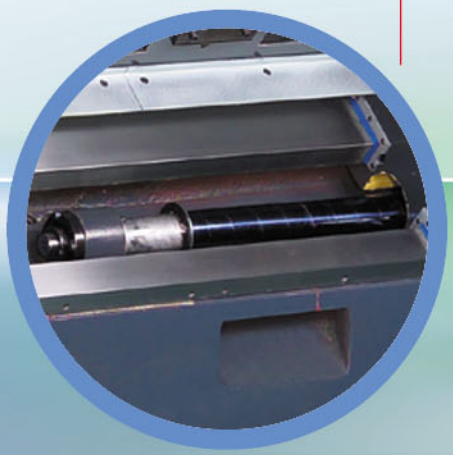

High rigid and accurate ballscrews are ϕ28 mm (ϕ1.1") and ϕ40 mm (ϕ1.6") for X axis and ϕ40 mm (ϕ1.6") and ϕ50 mm (ϕ2") for Z axis. Large diameter of ballscrew is ϕ40 mm (ϕ1.6") for the optional Y axis. They are pretensioned to eliminate thermal growth.

12-Angle Turret Working Capacity/Range

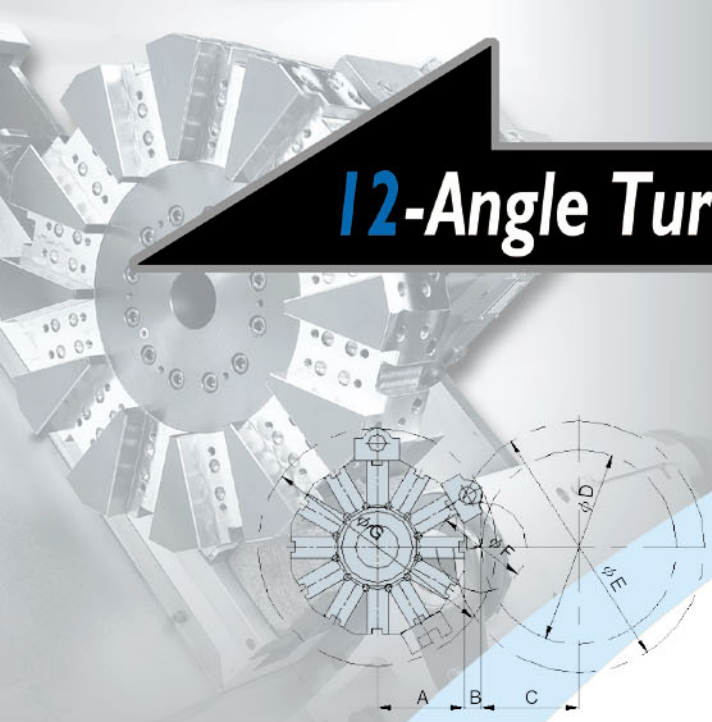

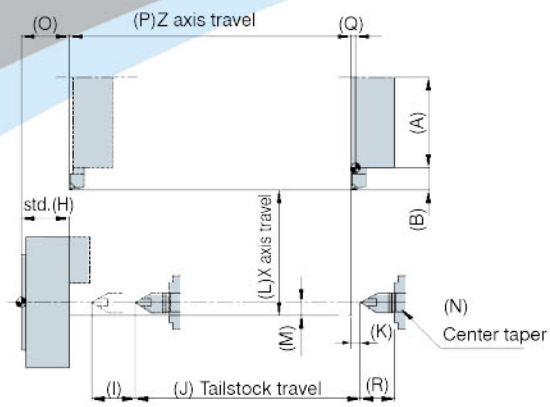

See the specification.

Unit: mm

Model \ Item	A	B	C	D	E	F	G	H	I	J	K	L	M	N	O	P	Q	R
SL-20								91							91			
SL-30			165	330	400					500		180				600		
SL-35	170	35	175	350		165	460	103	60	320		190	15	MT.4	103	400		68
SL-40										500		240				600		
SL-40L										900						1000		
SL-50										530						650		
SL-60	210	40	225	450	580	209	550	113	100	900	10	250			113	1040	10	
SL-65										1300						1500		
SL-70										1200			25	MT.5		1550		90
SL-80	234	36	270	540	700	246	658	122	125	1700		295			122	2000		
SL-100										2200						2500		
SL-120										2700						3000		

Tool

Direct Mount

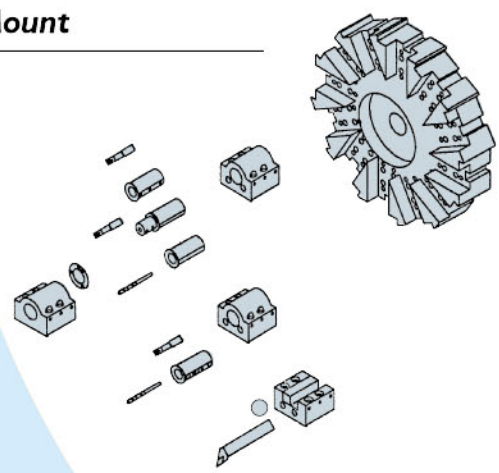

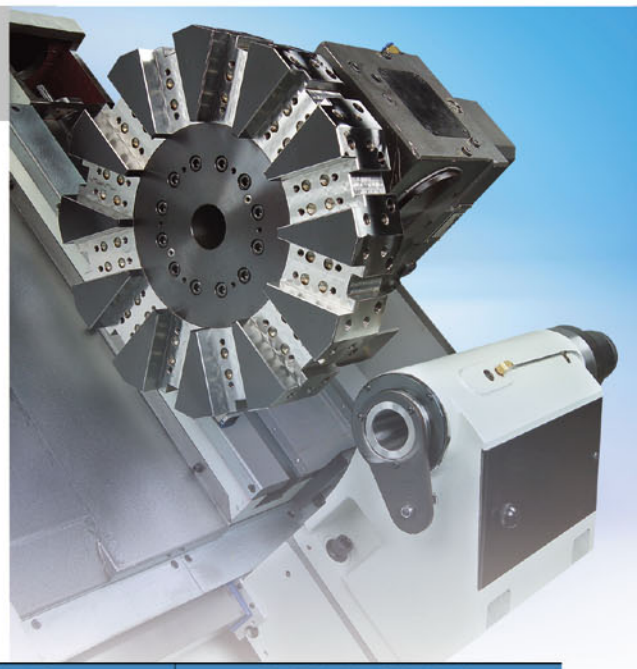

Tool \ Model	SL-20 / 30 / 35 / 40 / 40L	SL-50 / 60 / 65	SL-70 / 80 / 100 / 120
Bore	ϕ8, ϕ10, ϕ12, ϕ16 ϕ20, ϕ 25, ϕ32	ϕ8, ϕ10, ϕ12, ϕ16 ϕ20, ϕ25, ϕ32, ϕ40	ϕ12, ϕ16, ϕ20, ϕ25 ϕ30, ϕ32, ϕ40, ϕ50
Outerdia	□25, □20 (Opt.)	□ 25	□ 32
End	□25, □20 (Opt.)	□ 25	□ 32
Tap	ϕ16	ϕ20	ϕ32
Drill	MT#2, #3	MT#2, #3, #4	MT#2, #3, #4, #5

12-VDI Turret Working Capacity/Range

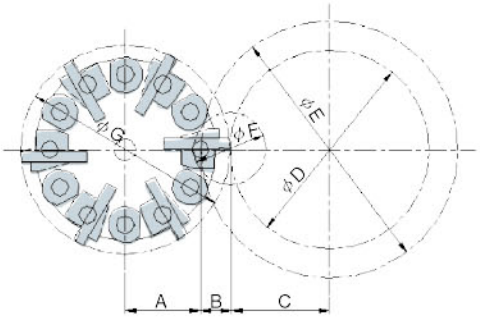

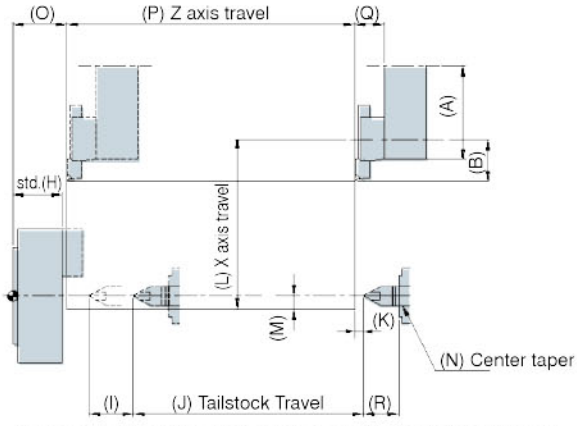

See the specification.

**When the machine is equipped with the optional Y-axis function, the Z-axis travel (P) and the tailstock travel (J) are less 100 mm than the specifications on the table.*

Unit: mm

Model \ Item	A	B	C	D	E	F	G	H	I	J	K	L	M	N	O	P	Q	R
SL-20	133	45	125	250	400	161	460	91	60	500	10	180	10	MT.4	91	600	45	68
SL-30								103							103			
SL-35			135	270						320		190				400		
SL-40			185	370	580			113		500		240			113	600		
SL-40L										900						1000		
SL-50	170	55				154	620		100	530		250		MT.5		650	55	90
SL-60										900						1040		
SL-65										1300						1500		
SL-70	200	64	221	442	700	224	685	122	125	1200		295			122	1550	67	
SL-80										1700						2000		
SL-100										2200						2500		
SL-120										2700						3000		

Tool

VDI (Opt.)

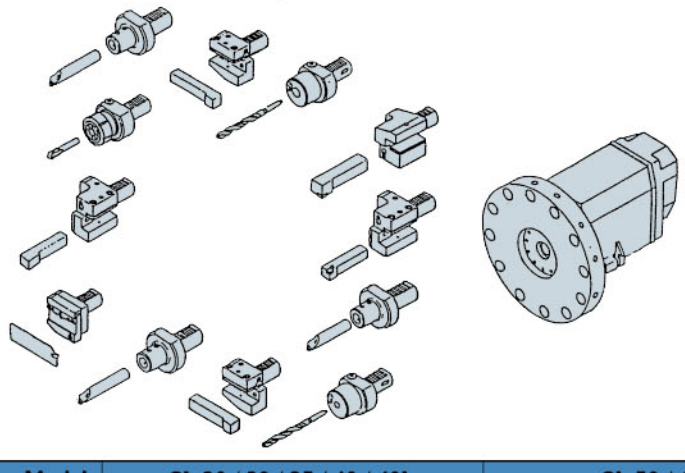

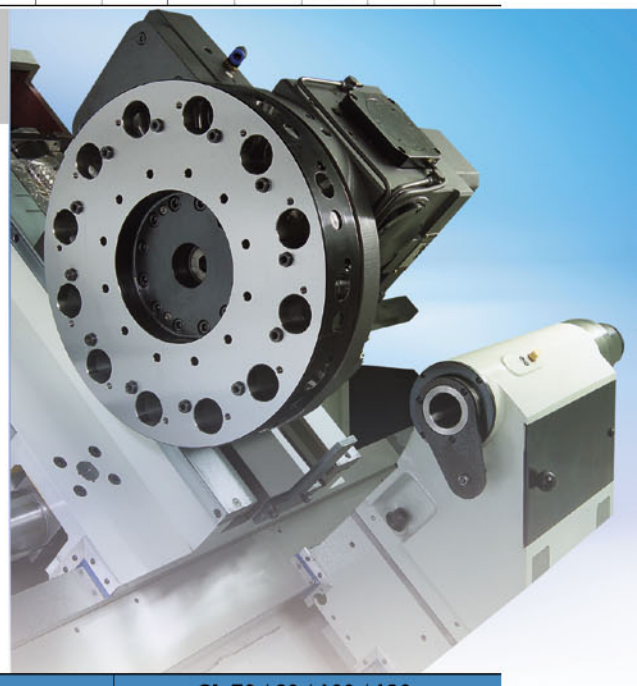

Tool \ Model	SL-20 / 30 / 35 / 40 / 40L	SL-50 / 60 / 65	SL-70 / 80 / 100 / 120
Bore	φ8, φ10, φ12, φ16 φ20, φ 25, φ32	φ8, φ10, φ12, φ16 φ20, φ25, φ32, φ40	φ12, φ16, φ20, φ25 φ30, φ32, φ40, φ50
Outerdia	□ 25	□20, □25	□25, □32
End	□ 25	□20, □25	□25, □32
Tap	φ16	φ20	φ32
Drill	MT#1, #2, #3	MT#2, #3, #4	MT#2, #3, #4, #5

Power Turret with C-Axis/C+Y-Axis Function

C-axis or C+Y-axis provides flexible turning performance for handling cam or special profiled parts that need milling / drilling/ tapping operations. 0.001 degree indexing allows accurate circular positioning.

Power Turret with C-Axis

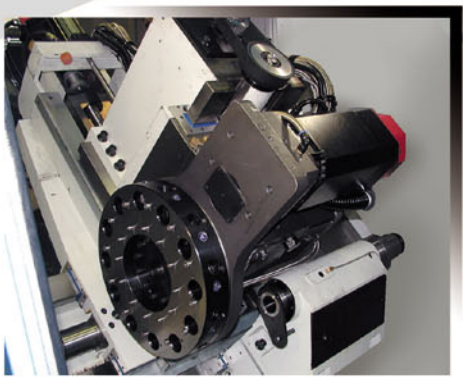

Power Turret with C+Y-Axis

Examples for Machining with Live Tools

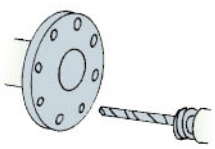

Drilling

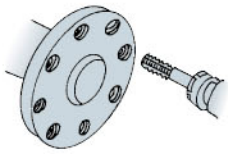

Thread cutting

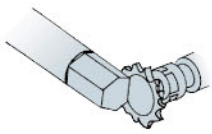

Face cutting

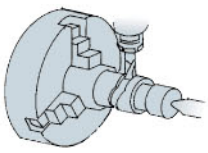

Cam cutting

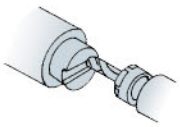

Slot cutting

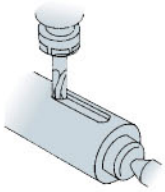

Key way cutting

Live Tooling

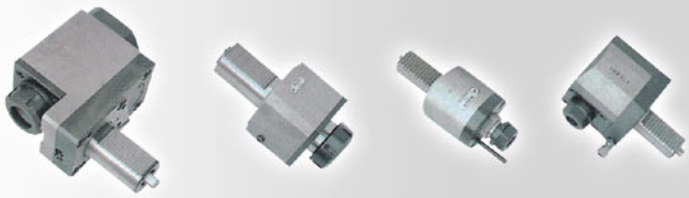

Specifications

Item / Model		SL-20 / 30 / 35 / 40 / +C		SL-50 / 60 / 65 / +C		SL-70 / 80 / 100 / 120 +C	
Power turret model (* for Y-axis)		TBMA 160	TBYA 160*	TBMA 200	TBYA 200*	TBMA 250	TBYA 250*
Max. speed of turret		4800 rpm		3800 rpm		3276 rpm	
Twist drilling	d x a (mm)x(mm/ μ)	12 x 0.20		20 x 0.20		22 x 0.20	
Slot milling	d x P x a (mm)x(mm)x(mm/min)	20 x 10 x 40		25 x 14 x 40		25 x 20 x 40	
Tapping	d x p (mm)x(mm)	M8 x 1.25		M16 x 2		M18 x 2	
Toolholder shaft size		ϕ 30		ϕ 40		ϕ 50	
Motor horsepower		AC 3.7 / 2.2 kW		AC 5.5 / 3.7 kW		AC 5.5 / 3.7 kW	

High Performance Spindles

Spindle

The spindle is mounted on precision-double-row roller bearings in conjunction with angular contact ball bearings, providing highest rigidity and accuracy.

The spindle is manufactured from alloy steel, heat treated and precision ground for maximum uniformity and durability.

The quill inner and outer lining is precision ground for fit with the spindle, thus ensuring extreme concentricity and accuracy of turned parts, and spindle service life is greatly extended.

Spindle Construction

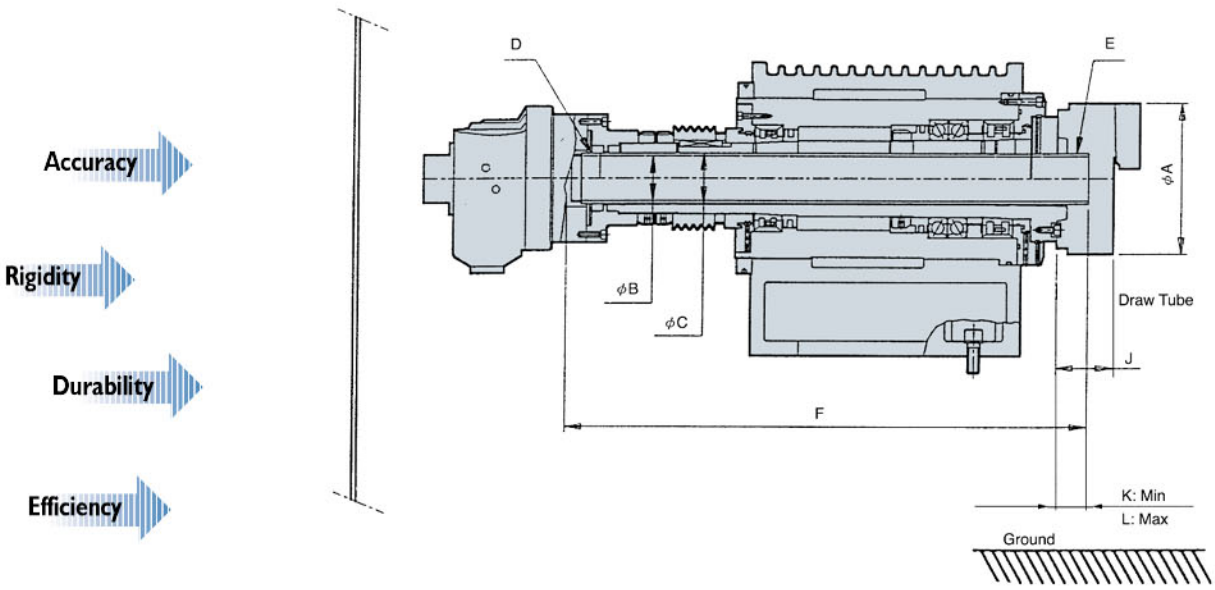

Unit: mm

Model \ Dimension	ϕA	ϕB	ϕC	D	E	F	J	K	L
SL-20	ϕ165	ϕ42	ϕ55	M55 x P2.0	M55 x P2.0	426	85	32	54
SL-30 / 35	ϕ210	ϕ51	ϕ65	M60 x P1.5	M60 x P2.0	665	103	32	54
SL-40 / 40L	ϕ210	ϕ76.5	ϕ86	M85 x P2.0	M85 x P2.0	677	115	32.5	57.5
SL-50 / 60 / 65	ϕ254	ϕ76.5	ϕ86	M87 x P2.0	M85 x P2.0	871.5	113	32.5	51.5
SL-50A / 60A / 65A / 70A / 80A / 100A / 120A	ϕ304	ϕ91	ϕ115	M100 x P2.0	M100 x P2.0	1178	122	31	54
SL-50A / 60A / 65A / 70A / 80A / 100A / 120A (Opt.)	ϕ315	ϕ102	ϕ115	M130 x P2.0	M115 x P2.0	1214	134	47	70
SL-50B / 60B / 65B / 70B / 80B / 100B / 120B	ϕ381	ϕ116	ϕ132.5	M130 x P2.0	M130 x P2.0	1084	149	49	72

Dimensions

SL-20 / 30 / 40

( ) For SL-40

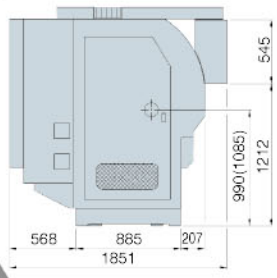

Side View

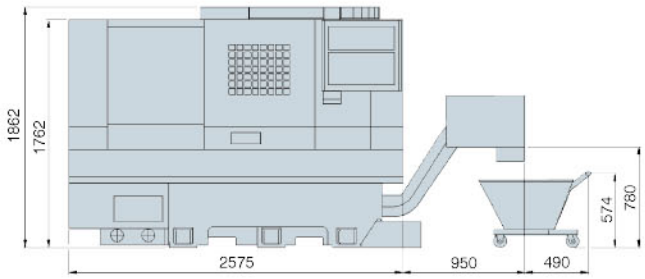

Front View

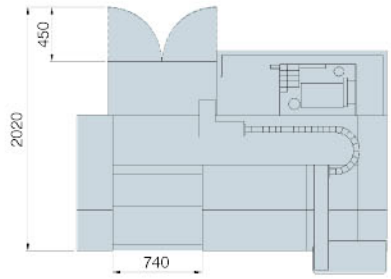

Top View (floor space required)

SL-40L

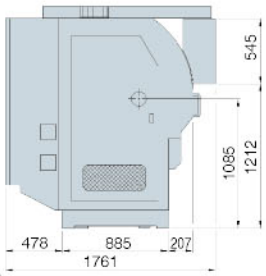

Side View

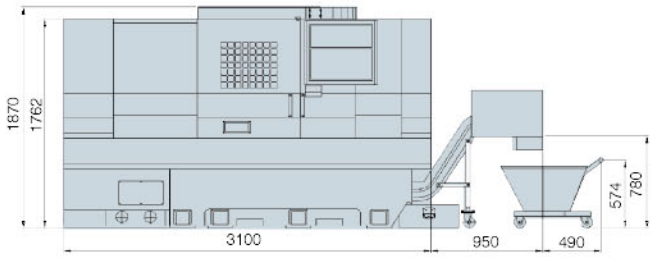

Front View

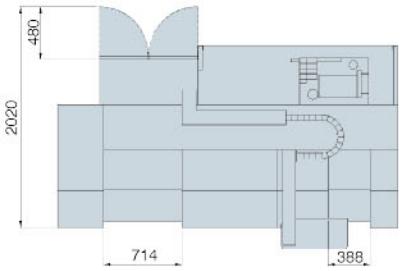

Top View (floor space required)

SL-35

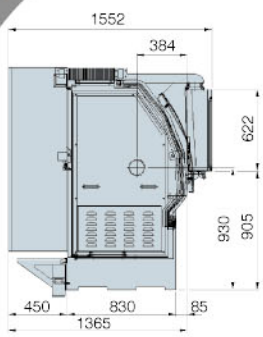

Side View

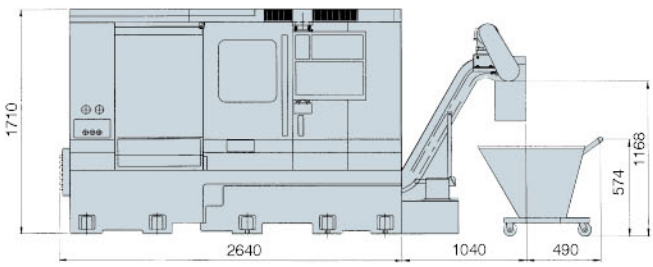

Front View

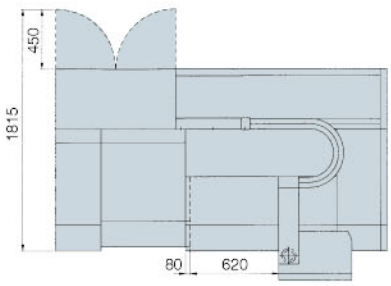

Top View (floor space required)

SL-50 / 50A / 50B / 60 / 60A / 60B

( ) For SL-50 / 50A / 50B

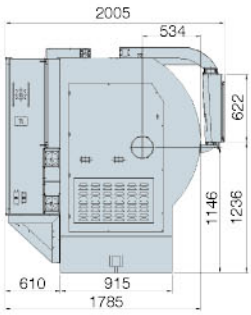

Side View

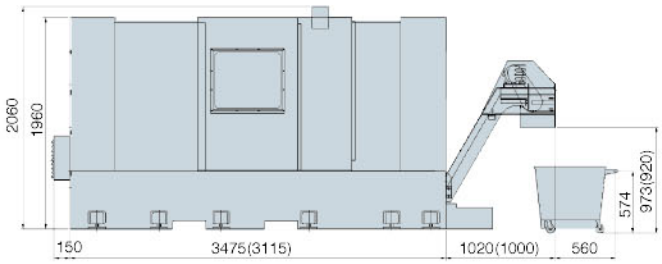

Front View

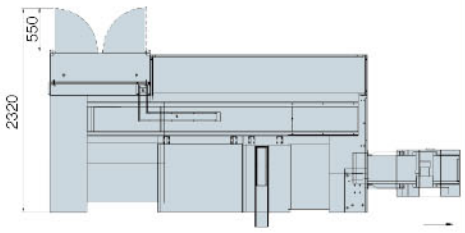

Top View (floor space required)

SL-65 / 65A / 65B

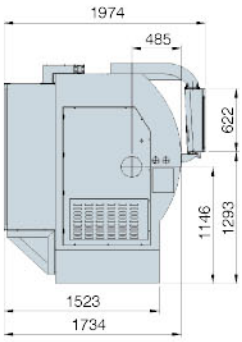

Side View

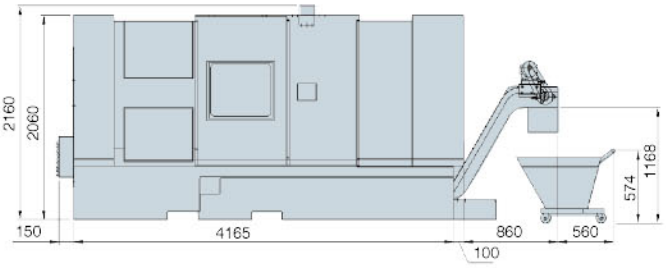

Front View

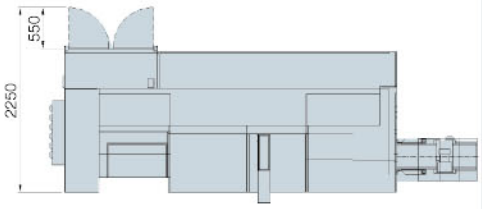

Top View (floor space required)

SL-70A / 80A / 100A / 120A / 70B / 80B / 100B / 120B

( ) For SL-80A / 80B *< > For SL-100A / 100B* *【 】for SL-120A / 120B*

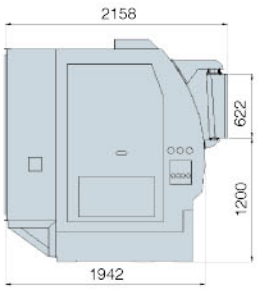

Side View

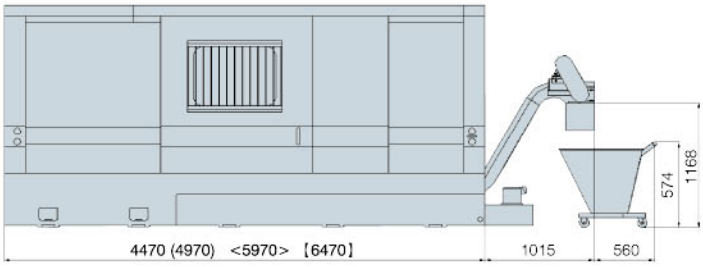

Front View

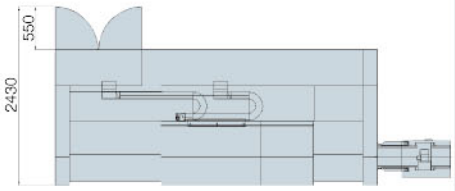

Top View (floor space required)

Specifications

Item \ Model		SL-20	SL-30	SL-35	SL-40	SL-40L	SL-50	SL-60	SL-65	SL-50A	SL-60A	SL-65A
Swing over bed (mm)		φ400			φ580							
Swing over cross slide (mm)		φ330		φ350	φ450							
Chuck size (inch)		6	8		10					12		
Bar capacity (mm)		φ42	φ51		φ76.5					φ91 / φ102 (Opt.)		
Spindle nose		A2-5	A2-6		A2-8					A2-8 / A2-11 (Opt.)		
Spindle bore (mm)		φ55	φ65		φ86					φ115		
Spindle speed step		One speed					Auto Hi-Lo					
Spindle speed (rpm)		6000	4500		4000		3500			3000 / 2800 (Opt.)		
Spindle motor (kW)		5.5 / 7.5	11 / 15				15 / 18.5			22 / 26		
Spindle bearing diameter (mm)		φ90	φ100		φ120		φ130			φ160		
No. of tools		12										
Cross travel (X-axis) (mm)		180		190	240		250					
Y-axis travel (mm)		±30					±40					
Longitudinal travel(Z-axis)(mm)		600		400	600	1000	650	1040	1500	650	1040	1500
(forY-axis)		(500)		(300)	(500)	(900)	(550)	(940)	(1400)	(550)	(940)	(1400)
Rapid traverse (X/Y/Z) (m/min)		24 / 10 / 24		20 / 10 / 20			15 / 10 / 18					
Tailstock travel (mm)		500		320	500	900	530	900	1300	530	900	1300
(forY-axis)		(400)		(220)	(400)	(800)	(430)	(800)	(1200)	(430)	(800)	(1200)
Tailstock quill travel (mm)		60					100					
Tailstock quill diameter (mm)		φ60					φ85					
Tailstock	Fixed	MT#4					MT#5					
spindle taper	Rotary	MT#3 (Opt.)					MT#4 (Opt.)					
Servo motor (X-axis) (kW)		1.6					3 / 4 (forY-axis)					
Servo motor (Y-axis) (kW)		1.6										
Servo motor (Z-axis) (kW)		1.6				3	4					
Power turret motor (Y-axis)(kW)		2.2 / 3.7					3.7 / 5.5					
Inclination: Bed / Saddle(*)		30° (*)		45°	30° (*)		45°					
Weight (kg)		3800	4000	4200	4500	5500	6200	7200	7500	6500	7200	7500
Machine	W x H	1851 x 1862		1552x1710	1851 x 1862		2320 x 2060	2320 x 2060	2250 x 2160	2320 x 2060	2320 x 2060	2250 x 2160
dimensions (mm)	L	3525		3680	3525	4050	4265	4645	5095	4265	4645	5275

- **All data subject to change without notice.**
- **All the specifications are listed with the FANUC CNC system and 12-angle turret.**

Standard Accessories:

1. Coolant system
2. Splash guard
3. Through hole 3-jaw chuck
4. Programmable hydraulic tailstock (for SL-35/50/65/70/80/100/120)
5. Hydraulic tailstock quill (for SL-20/30/40/40L)
6. Chain type chip conveyor
7. Tool box and various manuals
8. Tool holders (direct mounting type)
9. Auto lubrication with alarm
10. Halogen working lamp
11. Type of guide ways: box ways

Item \ Model		SL-70A	SL-80A	SL-100A	SL-120A	SL-50B	SL-60B	SL-65B	SL-70B	SL-80B	SL-100B	SL-120B
Swing over bed (mm)		φ700				φ580			φ700			
Swing over cross slide (mm)		φ540				φ450			φ540			
Chuck size (inch)		12				15						
Bar capacity (mm)		φ91 / φ102 (Opt.)				φ116						
Spindle nose		A2-8 / A2-11 (Opt.)				A2-11						
Spindle bore (mm)		φ115				φ132.5						
Spindle speed step		Auto Hi-Lo							4 steps			
Spindle speed (rpm)		3000 / 2800 (Opt.)				2000						
Spindle motor (kW)		22 / 26										
Spindle bearing diameter (mm)		φ160				φ180						
No. of tools		12										
Cross travel (X-axis) (mm)		295				250			295			
Y-axis travel (mm)		±50				±40			±50			
Longitudinal travel(Z-axis)(mm) (forY-axis)		1550 (1450)	2000 (1900)	2500 (2400)	3000 (2900)	650 (550)	1040 (940)	1500 (1400)	1550 (1450)	2000 (1900)	2500 (2400)	3000 (2900)
Rapid traverse (X/Y/Z) (m/min)		12 / 10 / 15				15 / 10 / 18			12 / 10 / 15			
Tailstock travel (mm) (forY-axis)		1200 (1100)	1700 (1600)	2200 (2100)	2700 (2600)	530 (430)	900 (800)	1300 (1200)	1200 (1100)	1700 (1600)	2200 (2100)	2700 (2600)
Tailstock quill travel (mm)		125				100			125			
Tailstock quill diameter (mm)		φ125				φ85			φ125			
Tailstock spindle taper	Fixed	MT#5				MT#5			MT#5			
	Rotary	MT#5 (Opt.)				MT#4 (Opt.)			MT#5 (Opt.)			
Servo motor (X-axis) (kW)		3										
Servo motor (Y-axis) (kW)		3.8				1.6			3.8			
Servo motor (Z-axis) (kW)		4										
Power turret motor (Y-axis)(kW)		3.7 / 5.5										
Inclination: Bed / Saddle(*)		45°										
Weight (kg)		14000	15000	16000	17000	6500	7500	7800	14000	15000	16000	17000
Machine dimensions (mm)	W x H	2430 x 2160				2320 x 2060	2320 x 2060	2100 x 2120	2430 x 2160			
	L	5485	5985	6985	7485	4265	4645	5275	5485	5985	6985	7485

■ All data subject to change without notice.

■ All the specifications are listed with the FANUC CNC system and 12-angle turret.

Optional Accessories:

1. C-axis (C.S axis with angle encoder but no gear box / C.F axis with gear box)
2. C+Y-axis
3. Contact tool setting system
4. Parts catcher
5. Tool holders (VDI type)
6. Programmable hydraulic tailstock (for SL-20/30/40/40L)
7. Bar feeder interface (or bar feeder)
8. Auto Hi-Lo gear box (SL-20/30/35/40/40L)
9. Rotary tailstock
10. Manual guide *i* / 0*i* (0*i*TC) ; Manual guide *i* (18*i*T / 21*i*T)
11. Angle encoder for C-axis

Item \ Model		Sub-Spindle							
		SL-35-2S	SL-50-2S	SL-60-2S	SL-50A-2S	SL-60A-2S	SL-70A-2S	SL-80A-2S	SL-100A-2S
Swing over bed (mm)		ϕ400	ϕ580				ϕ700		
Swing over cross slide (mm)		ϕ280	ϕ450 / ϕ380 (Y-axis)				ϕ540		
Chuck size (inch)		8	10		12				
Bar capacity (mm)		ϕ51	ϕ76.5		ϕ91 / ϕ102 (Opt.)				
Spindle nose		A2-6	A2-8		A2-8 / A2-11 (Opt.)				
Spindle bore (mm)		ϕ66	ϕ86		ϕ115				
Spindle speed step		One speed			Auto Hi-Lo				
Spindle speed (rpm)		4500	3500		3000 / 2800 (Opt.)				
Spindle motor (kW)		9 / 11	15 / 18.5		22 / 26				
Spindle bearing diameter (mm)		ϕ100	ϕ130		ϕ160				
Sub-spindle chuck size (inch)		6	8 / 10 (Opt.)						
Sub-spindle bar capacity (mm)		ϕ42	ϕ51 / ϕ76.5 (Opt.)						
Sub-spindle nose		A2-5	A2-6 / A2-8 (Opt.)						
Sub-spindle bore (mm)		ϕ55	ϕ66						
Sub-spindle speed step		One speed							
Sub-spindle speed (rpm)		6000	4500 / 3500 (Opt.)						
Sub-spindle motor (kW)		5.5 / 7.5	11 / 15						
Sub-spindle bearing diameter (mm)		ϕ85	ϕ100 / ϕ130 (Opt.)						
No. of tools		12							
Cross travel (X-axis) (mm)		155	250				295		
Y-axis travel		±30	±40				±50		
Longitudinal travel (Z_1/Z_2-axis) (mm)		400	500	1000	500	1000	1500	2000	2500
Rapid traverse (X_1 / Y / Z_1 / Z_2)(m/min)		16 / 10 / 20 / 24	15 / 10 / 18 / 18				12 / 10 / 15 / 15		
Servo motor (X-axis) (kW)		1.6 / 3 (forY-axis)	3 / 4 (forY-axis)						
Servo motor (Y-axis) (kW)		1.6					3.8		
Servo motor (Z_1/Z_2-axis) (kW)		1.6 / 3 (forY-axis)	4.0						
Power turret motor (Y-axis) (kW)		2.2 / 3.7	3.7 / 5.5						
Inclination: Bed		45°							
Weight (kg)		5000	6500	7800	6500	7800	14000	14500	15000
Machine dimensions (mm)	W x H	1580 x 2000	2100 x 2120				2520 x 2200		
	L	3700	4400	5210	4675	5540	5485	5985	6485

- **All data subject to change without notice.**
- **All the specifications are listed with the FANUC CNC system and 12-angle turret.**

CNC Control Specs

O: Std. △: Opt. -: Nil

Item	Function	Specifications	SIEMENS	FANUC		
			810D / 840D	18iT	21iT	0iTC
Control axes	Standard number of control axes	axes	2	2	2	2
	No. of simultaneously controlled axes	axes	2	2	2	2
Input commands	Least detection increment	1μ	1μ	1μ	1μ	1μ
	Least programmable increment	1μ	1μ	1μ	1μ	1μ
	Inch/metric conversion	G20/G21	O	O	O	O
	Absolute/incremental command		O	O	O	O
	Diameter/radius designation		O	O	O	O
	ISO/EIA automatic identification		O	O	O	O
	RS232-C interface		O	O	O	O
Interpolation	Positioning (interpolation)	G00	O	O	O	O
	Linear interpolation	G01	O	O	O	O
	Circular interpolation	G02/G03	O	O	O	O
	Variable lead thread cutting		O	△	△	O
	Contineous thread cutting		O	O	O	O
Program	Memory capacity	Meter	640	640	640	640
	No. of programs stored		unlimited	200	200	200
	Background editing		O	O	O	O
Spindle functions	S code output 4-digit BCD-binary	S4BCD	O	O	O	O
	Constant peripheral speed control	G96/G97	O	O	O	O
	Spindle rate	%	0-200	50-150	50-150	50-150
Feed	Per-revolution		O	O	O	O
	Per-minute		O	O	O	O
	Rapid traverse rate	low25%,50%,100%	O	O	O	O
	Cutting speed rate	%	0-200	0-200	0-200	0-200
	Handle feed rate	x1,x10,x100	O	O	O	O
Miscellaneous function	M-code	M2(BCD)	O	O	O	O
Coordinate system	Automatic coordinate system setting		O	O	O	O
	Machine coordinate system		O	O	O	O
	Work coordinate system	G54-G59	O	△	△	O
	Coordinate system setting	G50	O	O	O	O
	Manual reference point return		O	O	O	O
	Automatic reference point return	G28/G29	O	O	O	O
	2nd reference point return	G30	O	O	O	O
	Reference point return verify	G27	O	O	O	O
Tool function	Tool command	T4 digit	O	O	O	O
	Shape/wear differentiated compensation		O	O	O	O
	Nose radius compensation	G40/G41/G42	O	O	O	O
	Number of offset sets		unlimited	16	16	64
Operation	Single block		O	O	O	O
	Block skip		O	O	O	O
	Dry run		O	O	O	O
	Machine lock		O	O	O	O
	Option stop	M01	O	O	O	O
	Miscellaneous function lock	M.S.T.lock	O	O	O	O
	Manual/Absolute ON/OFF		O	O	O	O
	PLC switch		O	O	O	O
Programming support function	Sub-program control	M98, M99	O	O	O	O
	Corner chamfering/corner rounding		O	O	O	O
	Canned cycle for drilling	G80-G89	O	O	O	O
	Multiple repetitive canned cycle for lathe	G70-G79	O	O	O	O
	User macro		O	O	O	O
	No. of variable command sets		unlimited	100	100	500
	Backlash compensation		O	O	O	O
	Memory-type pitch error compensation		O	O	O	O
	Direct drawing dimension program		–	O	O	O
Measurement function	Skip function		O	O	O	O
	Direct input of dffset value measured A		O	O	O	O
	Automatic tool offset		△	△	△	△
Safe protect	Emergency stop		O	O	O	O
	Travel protection		O	O	O	O
	Program protection		O	O	O	O
Other	CRT		9.5" LCD	10.4"LCD	10.4"LCD	7.2" mono LCD
	MDI	Full key	O	O	O	small type
	Languages	English/Japaness	7	7	7	7
	Run hour and parts count		O	O	O	O
	Graphic display		O	O	O	O
	Menu programming		O	O	O	O
	Conversational programming with graphic		△	△	△	△
	Touch sensor (tool setter)		△	△	△	△
	Chinese. French. German. Italian. Spanish		O	O	O	O
	Data server (HD)		△	△	△	△
	Ethernet interface		O	△	△	△

■ **All data subject to change without notice.**

Whatever You Need for Milling and Turning We Offer the Best.

JOHNFORD®

ROUNDTOP MACHINERY INDUSTRIES CO., LTD.

No.1056, Zhungshan Rd., Shenkang Shiang,
Taichung County 429, Taiwan (R.O.C.)
Tel : 886-4-2562-4721
Fax: 886-4-2561-3886
http: //www.johnford.com.tw
E-mail: johnford@johnford.com.tw

LT06E-12-2007/06